VHDL code for Seven-Segment Display on Basys 3 FPGA

Last time, I wrote a full FPGA tutorial on how to control the 4-digit 7-segment display on Basys 3 FPGA. A full Verilog code for displaying a counting 4-digit decimal number on the 7-segment display was also provided.

This VHDL project will present a full VHDL code for seven-segment display on Basys 3 FPGA. The seven-segment display on Basys 3 FPGA will be used to display a 4-digit hexadecimal number which is counting up every 1 second.

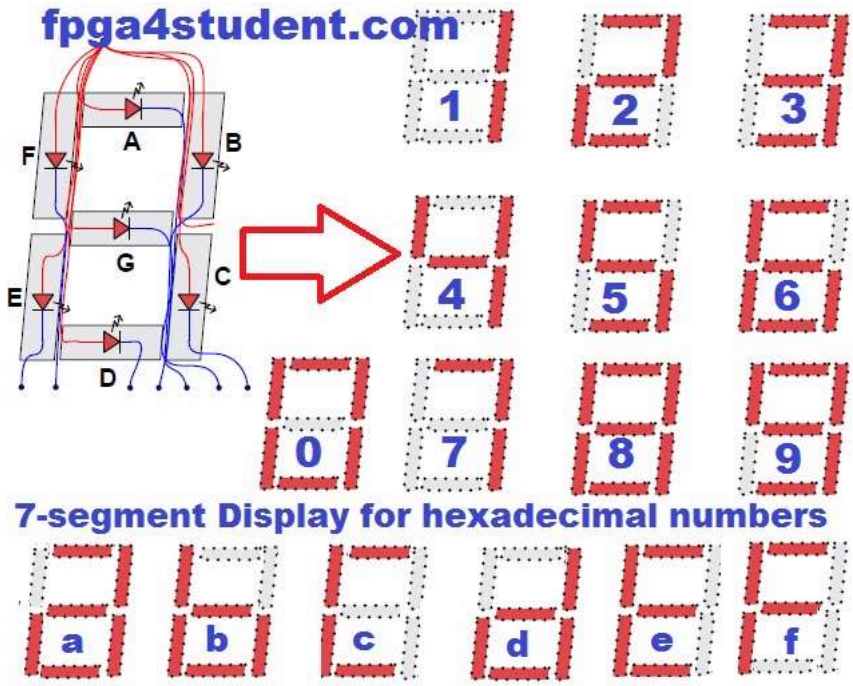

First of all, the truth table for BCD to 7-segment display decoder on Basys 3 FPGA is as follows:

Hex Number	Common-Anode	CA	CB	CC	CD	CE	CF	CG	Cathode[6:0]
0	high	low	low	low	low	low	low	high	0000001
1	high	high	low	low	high	high	high	high	1001111
2	high	low	low	high	low	low	high	low	0010010
3	high	low	low	low	low	high	high	low	0000110
4	high	high	low	low	high	high	low	low	1001100
5	high	low	high	low	low	high	low	low	0100100
6	high	low	high	low	low	low	low	low	0100000
7	high	low	low	low	high	high	high	high	0001111
8	high	low	low	low	low	low	low	low	0000000
9	high	low	low	low	low	high	low	low	0000100
a	high	low	low	low	low	low	high	low	0000010
b	high	high	high	low	low	low	low	low	1100000
c	high	low	high	high	low	low	low	high	0110001
d	high	high	low	low	low	low	high	low	1000010
e	high	low	high	high	low	low	low	low	0110000
f	high	low	high	high	high	low	low	low	0111000

fpga4student.com

VHDL code for BCD to 7-segment display decoder:

```
-- fpga4student: FPGA projects, Verilog projects, VHDL projects
-- Example VHDL code for BCD to seven-segment display on Basys 3 FPGA
```

```
process(LED_BCD)
begin
    case LED_BCD is
    when "0000" => LED_out <= "0000001"; -- "0"
    when "0001" => LED_out <= "1001111"; -- "1"
    when "0010" => LED_out <= "0010010"; -- "2"
    when "0011" => LED_out <= "0000110"; -- "3"
    when "0100" => LED_out <= "1001100"; -- "4"
    when "0101" => LED_out <= "0100100"; -- "5"
    when "0110" => LED_out <= "0100000"; -- "6"
    when "0111" => LED_out <= "0001111"; -- "7"
    when "1000" => LED_out <= "0000000"; -- "8"
    when "1001" => LED_out <= "0000100"; -- "9"
    when "1010" => LED_out <= "0000010"; -- a
    when "1011" => LED_out <= "1100000"; -- b
    when "1100" => LED_out <= "0110001"; -- C
    when "1101" => LED_out <= "1000010"; -- d
    when "1110" => LED_out <= "0110000"; -- E
    when "1111" => LED_out <= "0111000"; -- F
    end case;
end process;
```

Next, as I mentioned in the tutorial, a seven-segment display controller must be used to control the 4-digit seven-segment display on Basys 3 FPGA.
Below is the timing diagram for refreshing the 4-digit seven-segment display on Basys 3 FPGA:

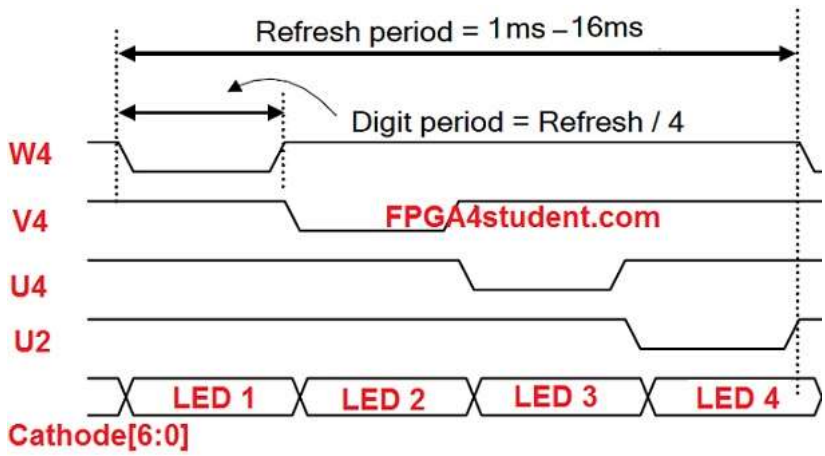

The refresh rate needed for the 4-digit seven-segment display is from 1ms to 16ms. Let's choose 10.5ms as the refresh period. Below is an example VHDL code for creating refresh rate and anode signals for the 4-digit seven-segment display on Basys 3 FPGA:

```
-- 7-segment display controller
-- generate refresh period of 10.5ms
process(clock_100Mhz,reset)
begin
    if(reset='1') then
        refresh_counter <= (others => '0');
    elsif(rising_edge(clock_100Mhz)) then
        refresh_counter <= refresh_counter + 1;
    end if;
end process;
 LED_activating_counter <= refresh_counter(19 downto 18);
-- 4-to-1 MUX to generate anode activating signals for 4 LEDs
process(LED_activating_counter)
begin
    case LED_activating_counter is
    when "00" =>
        Anode_Activate <= "0111";
        -- activate LED1 and Deactivate LED2, LED3, LED4
        LED_BCD <= displayed_number(15 downto 12);
```

```
        -- the first hex digit of the 16-bit number
    when "01" =>
        Anode_Activate <= "1011";
        -- activate LED2 and Deactivate LED1, LED3, LED4
        LED_BCD <= displayed_number(11 downto 8);
        -- the second hex digit of the 16-bit number
    when "10" =>
        Anode_Activate <= "1101";
        -- activate LED3 and Deactivate LED2, LED1, LED4
        LED_BCD <= displayed_number(7 downto 4);
        -- the third hex digit of the 16-bit number
    when "11" =>
        Anode_Activate <= "1110";
        -- activate LED4 and Deactivate LED2, LED3, LED1
        LED_BCD <= displayed_number(3 downto 0);
        -- the fourth hex digit of the 16-bit number
    end case;
end process;
```

Now, let's use it for displaying a counting hexadecimal number on the 4-digit seven-segment display on Basys 3 FPGA.

VHDL code for seven-segment display on Bays 3 FPGA:

```
-- fpga4student.com: FPGA projects, Verilog projects, VHDL projects
-- VHDL code for seven-segment display on Basys 3 FPGA
library IEEE;
use IEEE.STD_LOGIC_1164.ALL;
use IEEE.std_logic_unsigned.all;
entity seven_segment_display_VHDL is
    Port ( clock_100Mhz : in STD_LOGIC;-- 100Mhz clock on Basys 3 FPGA board
           reset : in STD_LOGIC; -- reset
           Anode_Activate : out STD_LOGIC_VECTOR (3 downto 0);-- 4 Anode signals
           LED_out : out STD_LOGIC_VECTOR (6 downto 0));-- Cathode patterns of 7-s
end seven_segment_display_VHDL;

architecture Behavioral of seven_segment_display_VHDL is
signal one_second_counter: STD_LOGIC_VECTOR (27 downto 0);
-- counter for generating 1-second clock enable
signal one_second_enable: std_logic;
-- one second enable for counting numbers
signal displayed_number: STD_LOGIC_VECTOR (15 downto 0);
-- counting decimal number to be displayed on 4-digit 7-segment display
signal LED_BCD: STD_LOGIC_VECTOR (3 downto 0);
signal refresh_counter: STD_LOGIC_VECTOR (19 downto 0);
-- creating 10.5ms refresh period
signal LED_activating_counter: std_logic_vector(1 downto 0);
-- the other 2-bit for creating 4 LED-activating signals
-- count         0    ->  1  ->  2  ->  3
-- activates    LED1    LED2   LED3   LED4
-- and repeat
begin
-- VHDL code for BCD to 7-segment decoder
-- Cathode patterns of the 7-segment LED display
process(LED_BCD)
begin
    case LED_BCD is
    when "0000" => LED_out <= "0000001"; -- "0"
    when "0001" => LED_out <= "1001111"; -- "1"
    when "0010" => LED_out <= "0010010"; -- "2"
    when "0011" => LED_out <= "0000110"; -- "3"
    when "0100" => LED_out <= "1001100"; -- "4"
    when "0101" => LED_out <= "0100100"; -- "5"
    when "0110" => LED_out <= "0100000"; -- "6"
    when "0111" => LED_out <= "0001111"; -- "7"
```

```
    when "1000" => LED_out <= "0000000"; -- "8"
    when "1001" => LED_out <= "0000100"; -- "9"
    when "1010" => LED_out <= "0000010"; -- a
    when "1011" => LED_out <= "1100000"; -- b
    when "1100" => LED_out <= "0110001"; -- C
    when "1101" => LED_out <= "1000010"; -- d
    when "1110" => LED_out <= "0110000"; -- E
    when "1111" => LED_out <= "0111000"; -- F
    end case;
end process;
-- 7-segment display controller
-- generate refresh period of 10.5ms
process(clock_100Mhz,reset)
begin
    if(reset='1') then
        refresh_counter <= (others => '0');
    elsif(rising_edge(clock_100Mhz)) then
        refresh_counter <= refresh_counter + 1;
    end if;
end process;
 LED_activating_counter <= refresh_counter(19 downto 18);
-- 4-to-1 MUX to generate anode activating signals for 4 LEDs
process(LED_activating_counter)
begin
    case LED_activating_counter is
    when "00" =>
        Anode_Activate <= "0111";
        -- activate LED1 and Deactivate LED2, LED3, LED4
        LED_BCD <= displayed_number(15 downto 12);
        -- the first hex digit of the 16-bit number
    when "01" =>
        Anode_Activate <= "1011";
        -- activate LED2 and Deactivate LED1, LED3, LED4
        LED_BCD <= displayed_number(11 downto 8);
        -- the second hex digit of the 16-bit number
    when "10" =>
        Anode_Activate <= "1101";
        -- activate LED3 and Deactivate LED2, LED1, LED4
        LED_BCD <= displayed_number(7 downto 4);
        -- the third hex digit of the 16-bit number
    when "11" =>
        Anode_Activate <= "1110";
        -- activate LED4 and Deactivate LED2, LED3, LED1
        LED_BCD <= displayed_number(3 downto 0);
        -- the fourth hex digit of the 16-bit number
    end case;
end process;
-- Counting the number to be displayed on 4-digit 7-segment Display
-- on Basys 3 FPGA board
process(clock_100Mhz, reset)
begin
        if(reset='1') then
            one_second_counter <= (others => '0');
        elsif(rising_edge(clock_100Mhz)) then
            if(one_second_counter>=x"5F5E0FF") then
                one_second_counter <= (others => '0');
            else
                one_second_counter <= one_second_counter + "0000001";
            end if;
        end if;
end process;
one_second_enable <= '1' when one_second_counter=x"5F5E0FF" else '0';
process(clock_100Mhz, reset)
```

```
begin
        if(reset='1') then
            displayed_number <= (others => '0');
        elsif(rising_edge(clock_100Mhz)) then
             if(one_second_enable='1') then
                displayed_number <= displayed_number + x"0001";
             end if;
        end if;
end process;
end Behavioral;
```

Pin assignment constraint file for the 4-digit seven-segment display on Basys 3 FPGA:

```
# Clock signal
set_property PACKAGE_PIN W5 [get_ports clock_100Mhz]
 set_property IOSTANDARD LVCMOS33 [get_ports clock_100Mhz]
set_property PACKAGE_PIN R2 [get_ports reset]
        set_property IOSTANDARD LVCMOS33 [get_ports reset]
#seven-segment LED display
        set_property PACKAGE_PIN W7 [get_ports {LED_out[6]}]
            set_property IOSTANDARD LVCMOS33 [get_ports {LED_out[6]}]
        set_property PACKAGE_PIN W6 [get_ports {LED_out[5]}]
            set_property IOSTANDARD LVCMOS33 [get_ports {LED_out[5]}]
        set_property PACKAGE_PIN U8 [get_ports {LED_out[4]}]
            set_property IOSTANDARD LVCMOS33 [get_ports {LED_out[4]}]
        set_property PACKAGE_PIN V8 [get_ports {LED_out[3]}]
            set_property IOSTANDARD LVCMOS33 [get_ports {LED_out[3]}]
        set_property PACKAGE_PIN U5 [get_ports {LED_out[2]}]
            set_property IOSTANDARD LVCMOS33 [get_ports {LED_out[2]}]
        set_property PACKAGE_PIN V5 [get_ports {LED_out[1]}]
            set_property IOSTANDARD LVCMOS33 [get_ports {LED_out[1]}]
        set_property PACKAGE_PIN U7 [get_ports {LED_out[0]}]
            set_property IOSTANDARD LVCMOS33 [get_ports {LED_out[0]}]
        set_property PACKAGE_PIN U2 [get_ports {Anode_Activate[0]}]
            set_property IOSTANDARD LVCMOS33 [get_ports {Anode_Activate[0]}]
        set_property PACKAGE_PIN U4 [get_ports {Anode_Activate[1]}]
            set_property IOSTANDARD LVCMOS33 [get_ports {Anode_Activate[1]}]
        set_property PACKAGE_PIN V4 [get_ports {Anode_Activate[2]}]
            set_property IOSTANDARD LVCMOS33 [get_ports {Anode_Activate[2]}]
        set_property PACKAGE_PIN W4 [get_ports {Anode_Activate[3]}]
            set_property IOSTANDARD LVCMOS33 [get_ports {Anode_Activate[3]}]
```

Use the VHDL source file and constraint file, create a project in Vivado and run the VHDL code on Basys 3 FPGA. Below is the demo video for the seven-segment display on Basys 3 FPGA:

Recommended VHDL projects:

1. What is a FPGA? How VHDL works on FPGA
2. VHDL code for FIFO memory
3. VHDL code for FIR Filter
4. VHDL code for 8-bit Microcontroller
5. VHDL code for Matrix Multiplication
6. VHDL code for Switch Tail Ring Counter

7. VHDL code for digital alarm clock on FPGA
8. VHDL code for 8-bit Comparator
9. How to load a text file into FPGA using VHDL
10. VHDL code for D Flip Flop
11. VHDL code for Full Adder
12. PWM Generator in VHDL with Variable Duty Cycle
13. VHDL code for ALU
14. VHDL code for counters with testbench
15. VHDL code for 16-bit ALU
16. Shifter Design in VHDL
17. Nonlinear Lookup Table Implementation in VHDL
18. Cryptographic Coprocessor Design in VHDL
19. Verilog vs VHDL: Explain by Examples
20. VHDL Code for Clock Divider on FPGA
21. Generate clock enable signal in VHDL
22. VHDL code for debouncing buttons on FPGA
23. VHDL code for Traffic light controller
24. VHDL code for a simple 2-bit comparator
25. VHDL code for a single-port RAM
26. VHDL code for Car Parking System using FSM
27. VHDL coding vs Software Programming
28. VHDL code for MIPS Processor
29. VHDL code for Moore FSM Sequence Detector
30. VHDL code for Seven-Segment Display on Basys 3 FPGA

DMCA PROTECTED

Privacy Policy | Disclaimer | Sitemap | Contact | Advertise Here
Copyright © 2016-2020 FPGA4student.com All Rights Reserved.